POIGNEE HUG

SC HANDLES

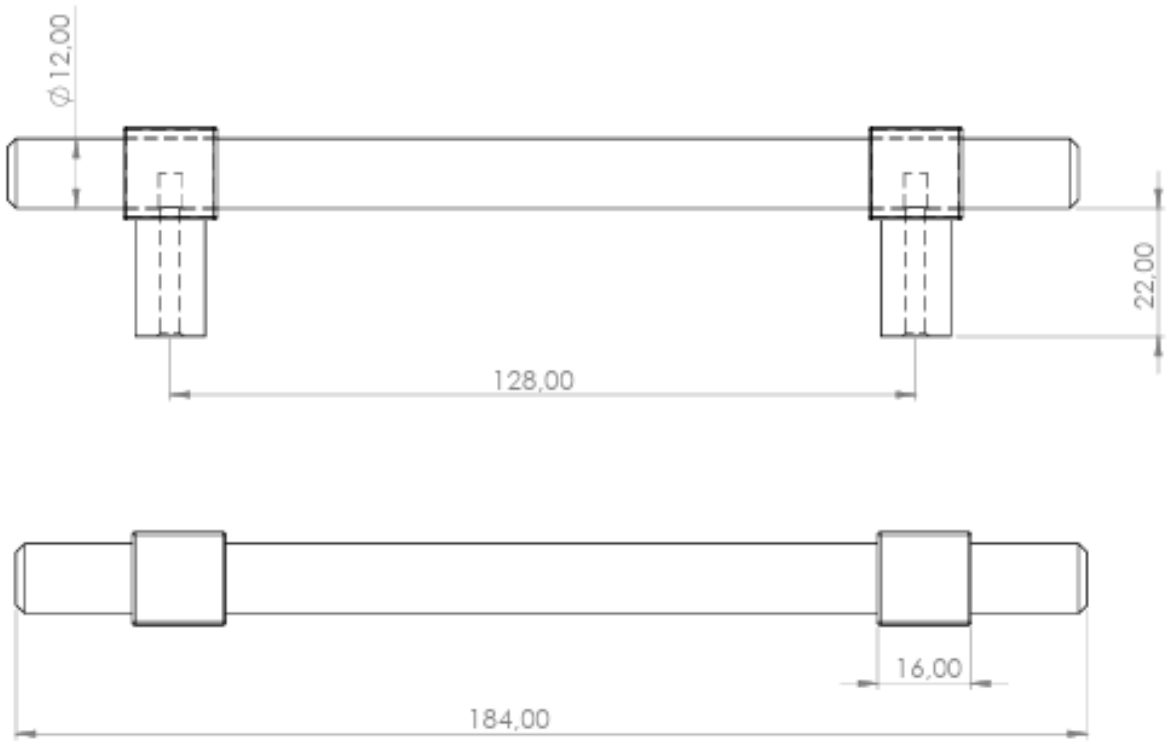

Tel : 02 43 13 49 49 Fax : 02 43 30 26 16 www.qama.fr

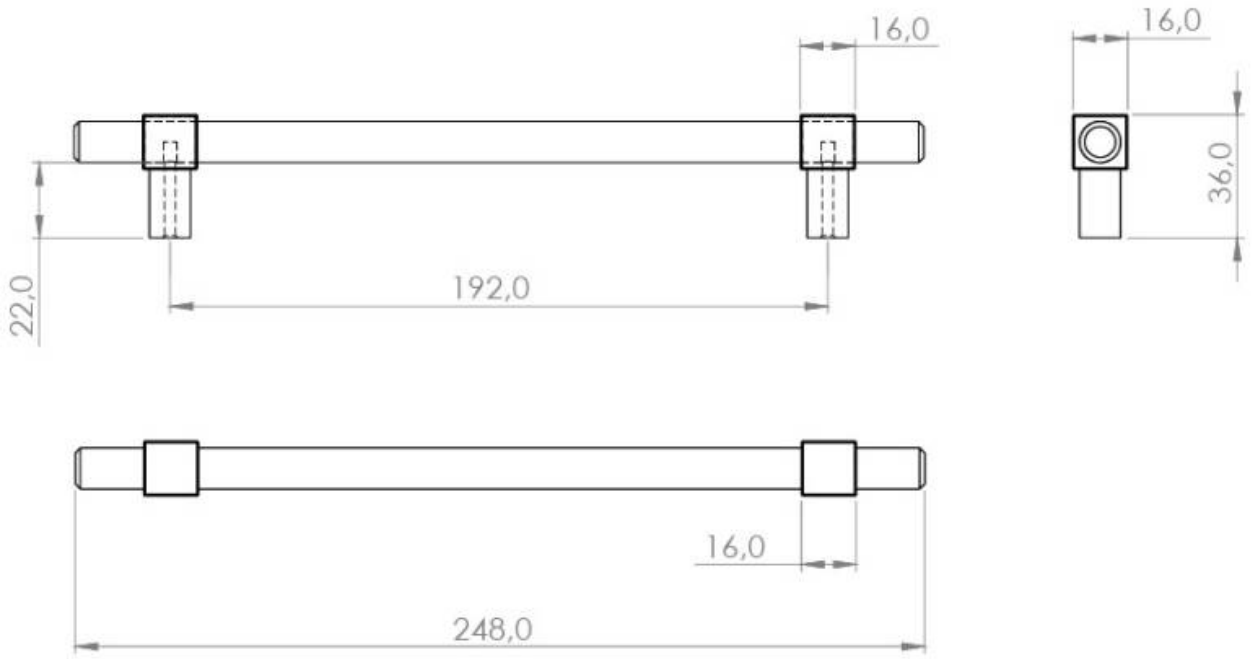
16,0
16,0
36,0
22,0
192,0
16,0
248,0

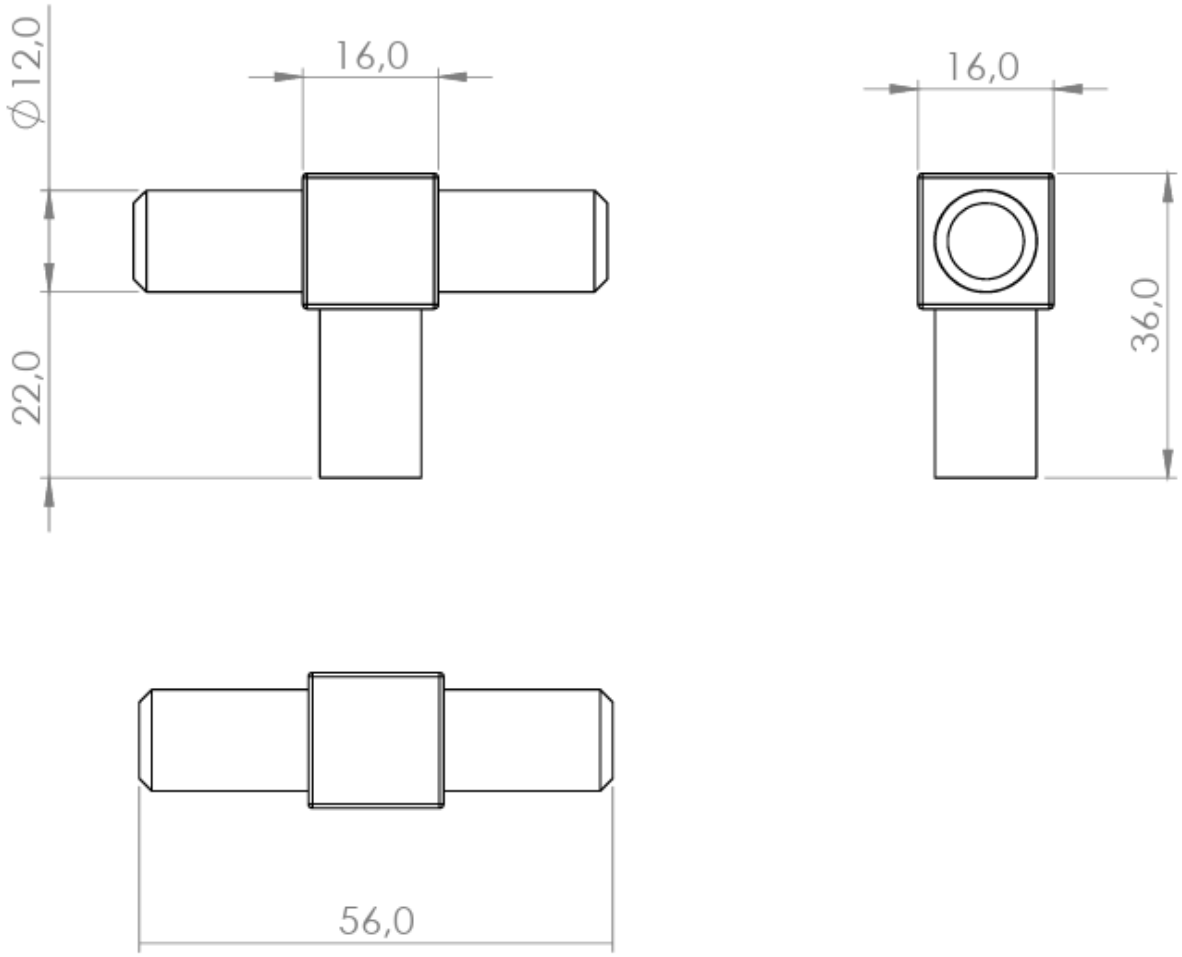
Ø12,0
16,0
22,0
16,0
36,0
56,0